Col. Charles Wells | Project Manager, DCGS-A

Army harnesses full power of intelligence assets

Col. Charles Wells is project manager of the Distributed Common Ground Systems-Army, managed by the Program Executive Office for Intelligence, Electronic Warfare and Sensors at Aberdeen, Md. He has held the job since last summer. Wells was the original project officer for Army Knowledge Online and was recognized for that work by Defense Systems' sister publication Federal Computer Week in 2000 as a Federal 100 award winner.

He spoke recently with Defense Systems Editor-in-Chief Barry Rosenberg *about the role DCGS-A is playing in the Defense Department's first tactical cloud, its initial deployment to Afghanistan and the decision to place DCGS-A hardware into an airborne surveillance platform.*

"We have nine different legacy programs of record that have been brought under the DCGS umbrella."

Col. Charles Wells

DS: Let's just start at the top with your thumbnail view of DCGS-A.

Wells: DCGS-A is the Army's cornerstone intelligence system for intelligence processing, exploitation and dissemination. Historically, intelligence data from a sensor would go into a ground station. The analysts working at that ground station could use that data, but it was hard to share that with the rest of the analysts across the force.

What DCGS-A does is to break that paradigm to take sensor data from all the sensors — airborne sensors, tactical sensors, even soldiers on the battlefield — and bring all those into a common data format. It brings together all different types of intelligence in a fused environment, whether it is signals intelligence, imagery or human intelligence, so you can do multi-intelligence analysis.

DS: Is the data all presented at once on a screen?

Wells: No. What it does is bring them into a common environment where you can look at different intelligence products from different sensors. Then you can use that to do multi-intelligence analysis. You can also share that with other analysts and provide good answers to the commander's intelligence request. So the real power of DCGS-A is that instead of these multiple stovepipes that we traditionally had in intelligence, we have changed the paradigm and bring all these different, stovepipe systems together into a common environment for analysts to work with and share.

DS: Many of those stovepipe systems still exist. So is the sensor data concurrently going to those older systems and DCGS-A?

Wells: Right. We have nine different legacy programs of record that have been brought under the DCGS umbrella. We are in the process of DCGS-enabling each of those. [For example], we are merging the DCGS-enabled Guardrail Ground Baseline and the DCGS-enabled Tactical Exploitation

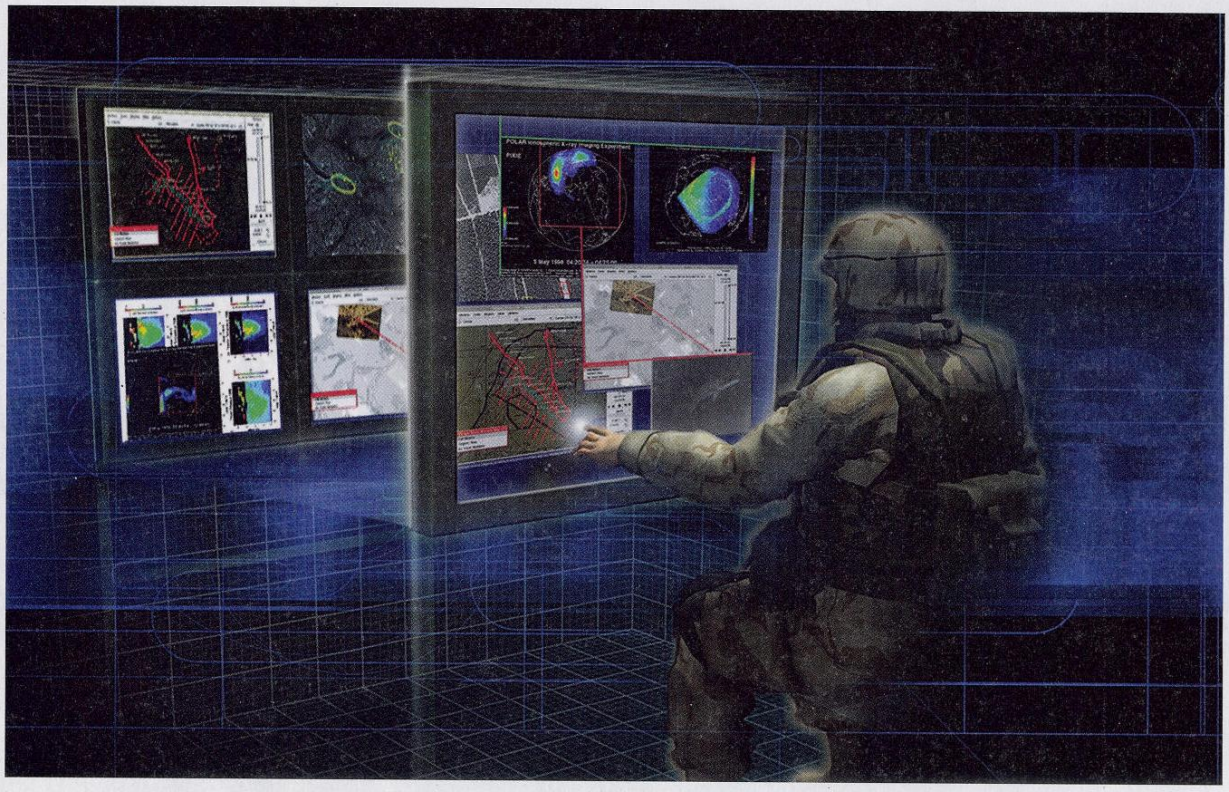

The Distributed Common Ground System-Army serves as a dedicated avenue for ingesting, fusing, analyzing and disseminating information throughout the Army and associated defense agencies.

System into a single system, called the Surveillance Information Processing Center. The real advantage is that as you collapse these legacy programs of record into a single portfolio — a single program where you can share the data — you are going to save tremendous long-term operations and maintenance costs because [you are not] maintaining nine separate systems.

DS: Have you quantified how much can be saved in maintenance and support?

Wells: Yes. One study that's noteworthy shows a cost/benefit analysis [in which the Army will realize] over $3 billion in cost avoidance over the total life cycle. That's money that is going to be saved that can be used for greater capabilities across the Army and improving intelligence systems.

DS: You presently have some DCGS-A capabilities in the field right now with your Version 3 system. Explain that please.

Wells: The latest version of DCGS-A Version 3 is called the Griffin software build. We are fielding that to Afghanistan right now because there was a request for advanced analytics. This was a joint urgent operational need statement from [Army] Maj. Gen. Michael Flynn when he was the senior intelligence officer there. [Griffin] has some new capabilities that we didn't have before. In addition to bringing multidiscipline intelligence together, it has IED predictive capability that takes historical IED attack data and lets you analyze where you think logistics routes are likely to experience IED problems based on analysis.

The second thing it has is a full-motion video exploitation tool that can take streaming UAV video or other types of video from which analysts can do video exploitation. The third thing it does — and this is pretty exciting — is that the Griffin software ties into a cloud-computing node. So we have got the first tactical deployment in the Department of Defense of a cloud-computing node. That landed at Bagram Air Base last November and went operational in March.

I think this cloud capability is really significant, and I think it's going to change the way that we do Army intelligence for the long term. And it's really exciting to be right at the cusp of deploying that to the field. *(For more information on the establishment of the cloud computing node at Bagram, see*

Defense Systems' latest Tech Watch.)

DS: I recently interviewed the project manager of the Aerial Common Sensors program, and he told me that DCGS-A is going onto the Enhanced Medium Altitude Reconnaissance and Surveillance System aircraft. What are you doing from your end to make that happen?

Wells: The good news is we both work for the same boss. We are both in PEO-IEW&S, so it's easy to collaborate. The plan is to embed our software directly into the EMARSS workstations. What that will do is allow the EMARSS intelligence products to be subscribed or discoverable by everybody that has access to DCGS-A. It kind of goes back to what I first said; instead of having a stovepipe sensor and a stovepipe database like we used to have, the data collected by EMARSS can be shared with all the analysts.

DS: Why couldn't that data just be transmitted to the DCGS-A on the ground? What's the advantage of having DCGS-A in the air?

Wells: It ties into the vision of the G2 of the Army, [Lt. Gen. Richard Zahner], to get DCGS-A closer to the sensor. His idea is that in doing that, you become more mission-effective. You are seeing more processing power being put with the sensor because you save a lot of bandwidth by processing at the sensor. Instead of pumping all that raw data down from the sensor, you process at the sensor and send processed data down instead of everything.

DS: Tell me about your priorities for the next six to 12 months.

Wells: I would first say the Griffin capability, which we've literally just started fielding. So we are going to continue to surge the Griffin software capability to the units rotating into Afghanistan. And then closely tied to that is this cloud capability, and in putting our full effort into getting this first tactical deployment of a cloud node in the DOD…making sure that's successful and making sure that it has all the advanced analytic tools to support the soldiers in Afghanistan.

Those are the two big things in regard to new capabilities. We are always working closely with other government agencies like DARPA, with academia, and with other government labs to [discover] what's the latest and greatest out there and how can we roll that into DCGS-A to provide a near-term capability for the soldier. ■

Real-Time Emulation of JTRS Networks.

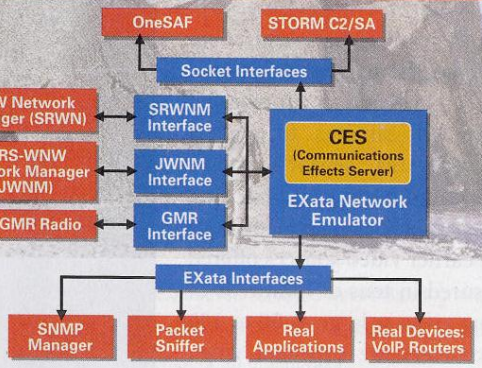

JNE Architecture

JNE Users: JPEO JTRS NED; Army ATEC OTC; Army TRADOC Signal Center; Army CERDEC.

JTRS Network Emulator (JNE*) accurately emulates JTRS waveforms and mobile networks, providing an environment for network planning, T&E, application development and training.

JNE is a proven software-based capability that allows you to emulate large networks of JTRS and current radios in real-time. Using Live-Virtual-Constructive (LVC) models, JNE provides a scalable environment with realistic effects to support large scale (≥100's radios) analysis, testing and training without physical JTRS radios. The emulated network performs exactly as a real network—in *real* time, using *real* applications like SA, VoIP, web, streaming video and chat.

By reducing or eliminating the need for physical radios, JNE lowers costs and improves the integrity of your testing results, particularly for difficult environments like urban areas, mountainous terrain, and mixed land-air deployments.

Learn more about JNE at www.scalable-networks.com/JNE.

*JNE was developed by SNT under a SBIR Phase 2.5 contract funded by JPEO JTRS, with matching funding from Program Execution Office Integration (PEO I) and Army Operational Test Command. Access to JNE and CES requires a Distribution Agreement and a government sponsor. Requires EXata license.

SCALABLE NETWORK TECHNOLOGIES

Call 310-703-1335 to learn how SNT solutions reduce cost and development time for military networks